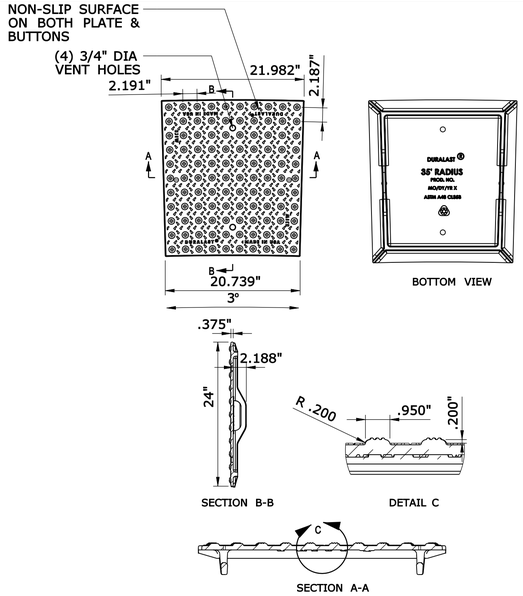

NOTES:
1. INSTALLATION TO BE COMPLETED IN ACCORDANCE WITH MANUFACTURER'S SPECIFICATIONS.
2. OTHER RADII TO BE PROVIDED AS REQUIRED.

TACTILE WARNING (35' RADIUS) — 6 / -

NOT TO SCALE
CAST IRON-ADA-plate35.dgn

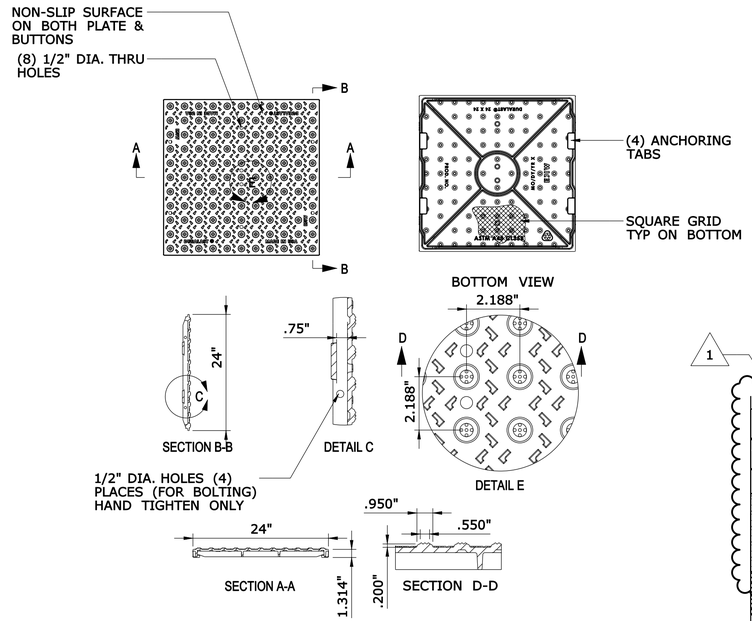

NOTE:
1. INSTALLATION TO BE COMPLETED IN ACCORDANCE WITH MANUFACTURER'S SPECIFICATIONS.

TACTILE WARNING (24" X 24") — 4 / -

NOT TO SCALE
CAST IRON-ADA-sq plate.dgn

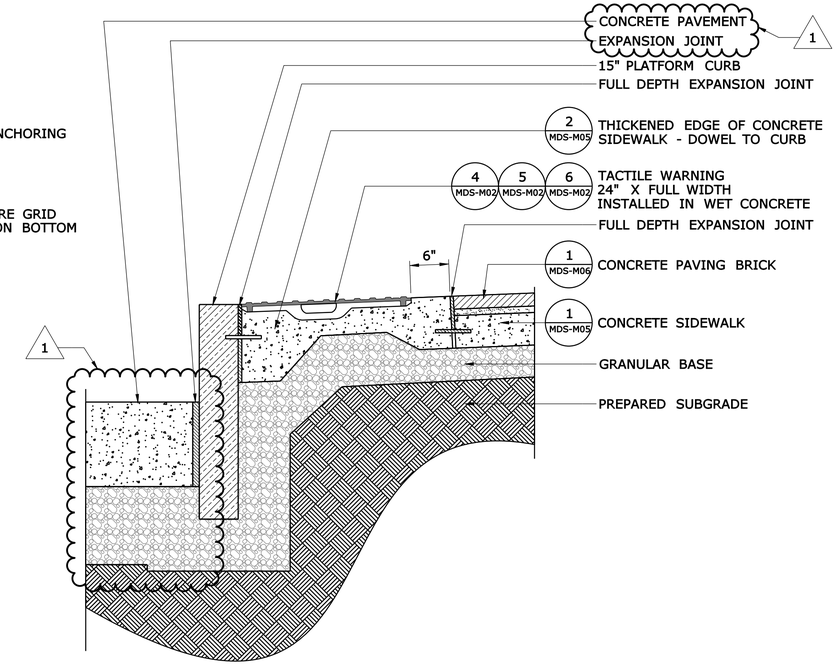

TACTILE WARNING AT PLATFORM EDGE — 2 / -

SCALE: 1" = 1'-0"
CAST IRON-ADA-PLATFORM.dgn

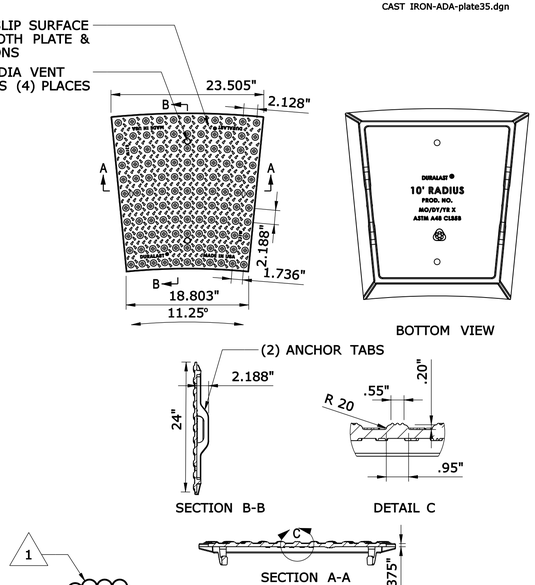

TACTILE WARNING (10' RADIUS) — 5 / -

NOT TO SCALE
CAST IRON-ADA-plate.dgn

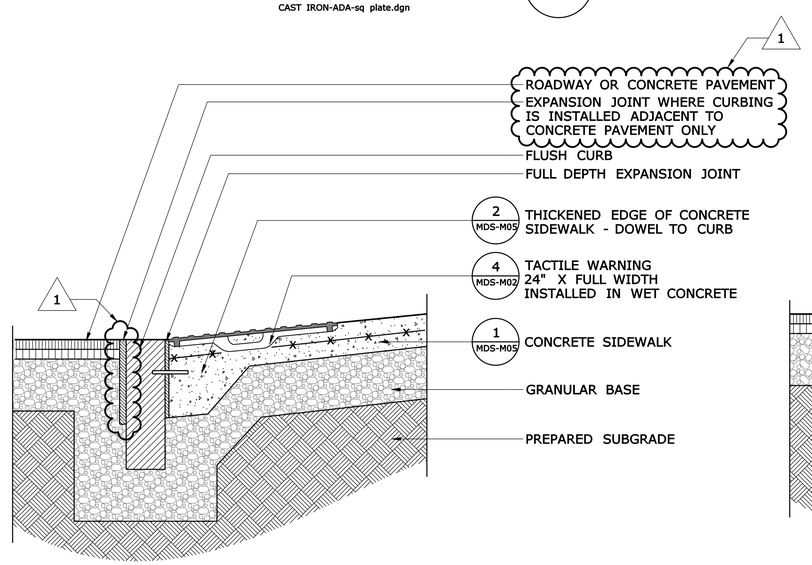

TACTILE WARNING AT CONCRETE SIDEWALK RAMP — 3 / -

SCALE: 1" = 1'-0"
CAST IRON-ADA-2.dgn

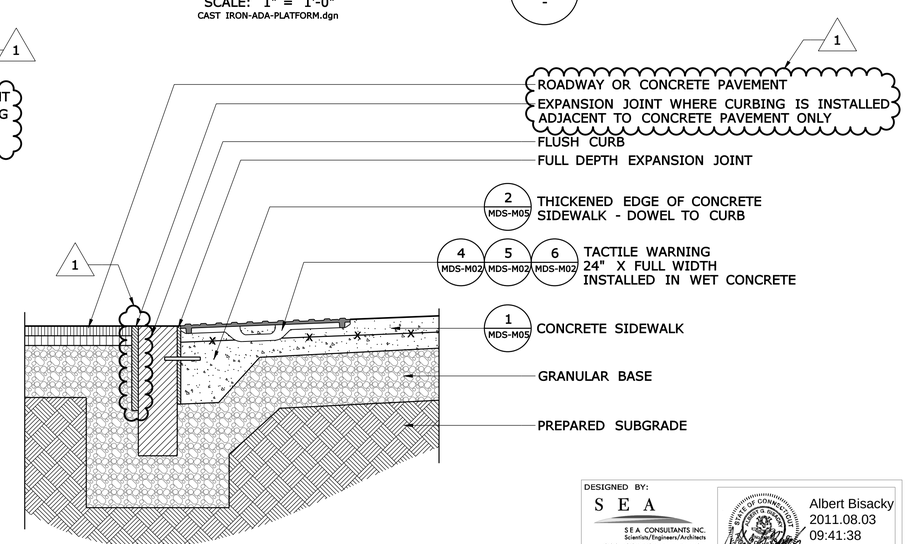

TACTILE WARNING — 1 / -

SCALE: 1" = 1'-0"
CAST IRON-ADA-1.dgn

NOTE:
SEE CIVIL DETAILS FOR ROADWAY, CURB, AND EXPANSION JOINT DETAILS

DESIGNED BY:
S E A
S E A CONSULTANTS INC.
Scientists/Engineers/Architects
200 CORPORATE PLACE
ROCKY HILL, CT 06067
Albert Bisacky
2011.08.03 09:41:38 -04'00'

DESIGNED BY:
Richter & Cegan Inc.
8-B CANAL COURT
P.O. BOX 567
AVON, CT 06001
William Richter
I Sign and Certify for Sheet Nos. 05.20.005.A1 & 05.20.010.A1
2011.08.03 09:49:32 -04'00'

ADDENDUM NO. 1

REV.	DATE	REVISION DESCRIPTION	SHEET NO.
-	-	-	-
-	-	-	-
-	-	-	-
-	-	-	-
-	-	-	-
1	7/27/11	A1- CALLOUT REVISION/REVISED EXP. JOINT	-

THE INFORMATION, INCLUDING ESTIMATED QUANTITIES OF WORK, SHOWN ON THESE SHEETS IS BASED ON LIMITED INVESTIGATIONS BY THE STATE AND IS IN NO WAY WARRANTED TO INDICATE THE CONDITIONS OF ACTUAL QUANTITIES OF WORK WHICH WILL BE REQUIRED.

Plotted: 7/25/2011

DESIGNER/DRAFTER: WW
CHECKED BY: GG
SCALE AS NOTED

STATE OF CONNECTICUT
DEPARTMENT OF TRANSPORTATION

Filename: ...\FD_MSH_DET_88H039_MDS-M02_GEN_A1.dgn

SIGNATURE/BLOCK:
Richter & Cegan Inc.
PO Box 567
8-B Canal Court
Avon, CT 06001

PROJECT TITLE: NEW BRITAIN - HARTFORD BUSWAY

TOWN: NEW BRITAIN

DRAWING TITLE: SITE MATERIALS & FURNISHINGS DETAILS

PROJECT NO. 088-177
DRAWING NO. MDS-M02
SHEET NO. 05.20.005.A1

NOTES:
1. PRECAST CONCRETE BOLLARD MATERIAL COLOR AND FINISH TO MATCH STATION ARCHITECTURAL PRECAST.
3. TOP OF BOLLARD SQUARE BASE TO BE FLUSH WITH ADJACENT PAVEMENT.

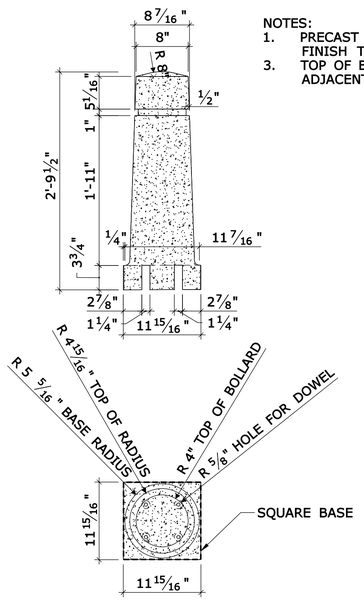

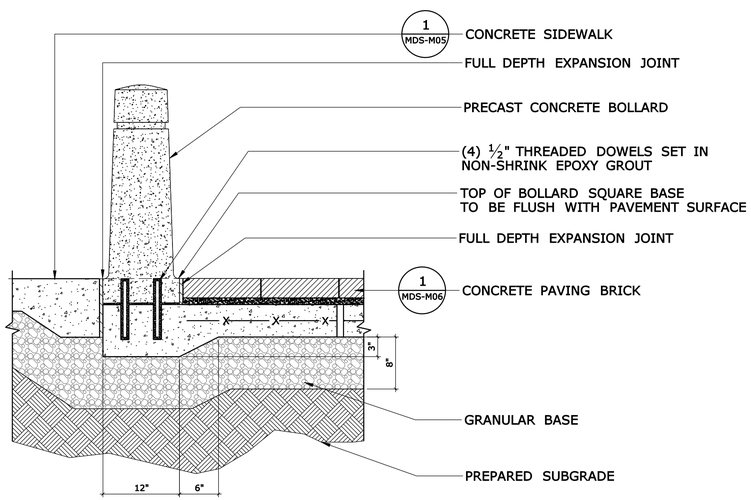

PRECAST CONCRETE BOLLARD 3 / -

SCALE: 1"=1'-0"
precast-conc-bollard.dgn

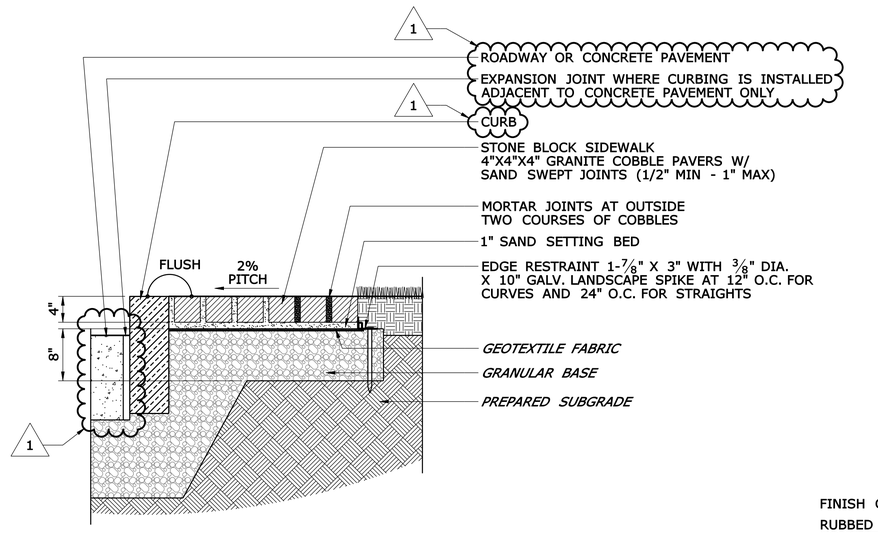

SECTION B-B'

SCALE: 1" = 1'-0"

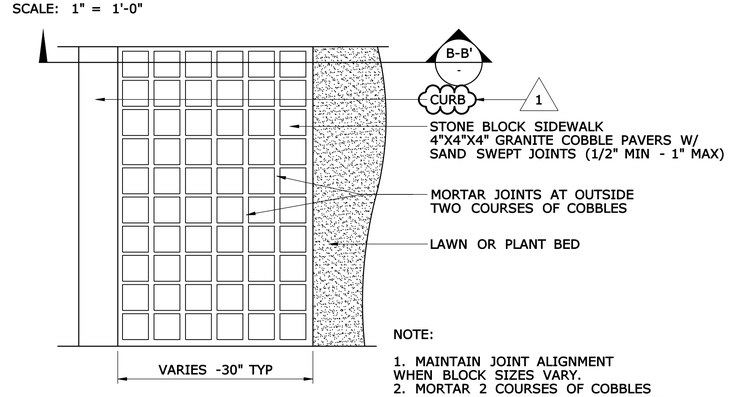

NOTE:

1. MAINTAIN JOINT ALIGNMENT WHEN BLOCK SIZES VARY.
2. MORTAR 2 COURSES OF COBBLES AROUND UPLIGHT ELECTRIAL FIXTURES.

PLAN

SCALE: 1" = 1'-0"

STONE BLOCK SIDEWALK - BAND 2 / -

SCALE: AS NOTED
GRANITE COBBLE edge.dgn

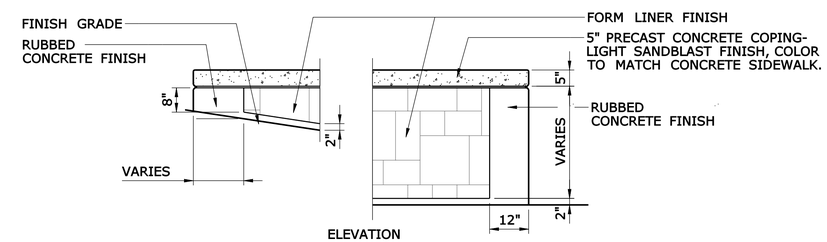

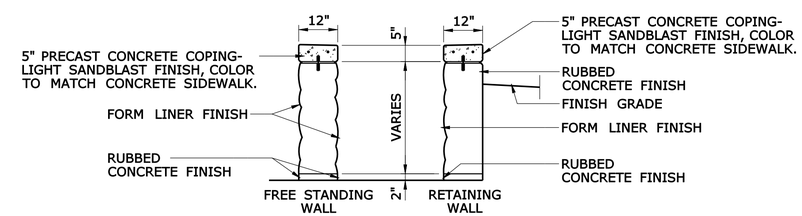

NOTES:
1. RAILINGS NOT SHOWN FOR CLARIFICATION OF WALL FINISHES.
2. FORM LINER PATTERN AND COLOR AS SPECIFIED.
3. FORM LINER ENDS 2" ABOVE ADJACENT CONCRETE RAMP AND/OR CONCRETE SIDEWALK.

WALL FINISH DETAIL 1 / -

SCALE: 1/2" =1'-0"
form liner-walls.dgn

1 NOTE: SEE CIVIL DETAILS FOR ROADWAY, CURB, AND EXPANSION JOINT DETAILS

ADDENDUM NO. 1

REV.	DATE	REVISION DESCRIPTION	SHEET NO.
-	-	-	-
-	-	-	-
-	-	-	-
-	-	-	-
-	-	-	-
1	7/27/11	A1- CALLOUT REVISION/REVISED EXP. JOINT	-

THE INFORMATION, INCLUDING ESTIMATED QUANTITIES OF WORK, SHOWN ON THESE SHEETS IS BASED ON LIMITED INVESTIGATIONS BY THE STATE AND IS IN NO WAY WARRANTED TO INDICATE THE CONDITIONS OF ACTUAL QUANTITIES OF WORK WHICH WILL BE REQUIRED.

Plotted: 7/25/2011

DESIGNER/DRAFTER: WW
CHECKED BY: GG
SCALE AS NOTED

STATE OF CONNECTICUT
DEPARTMENT OF TRANSPORTATION

Filename: ...\FD_MSH_DET_88H039_MDS-M07_GEN_A1.dgn

SIGNATURE/BLOCK:
Richter & Cegan Inc.
PO Box 567
8-B Canal Court
Avon, CT 06001

PROJECT TITLE: NEW BRITAIN - HARTFORD BUSWAY

TOWN: NEW BRITAIN

DRAWING TITLE: SITE MATERIALS & FURNISHINGS DETAILS

PROJECT NO. 088-177
DRAWING NO. MDS-M07
SHEET NO. 05.20.010.A1