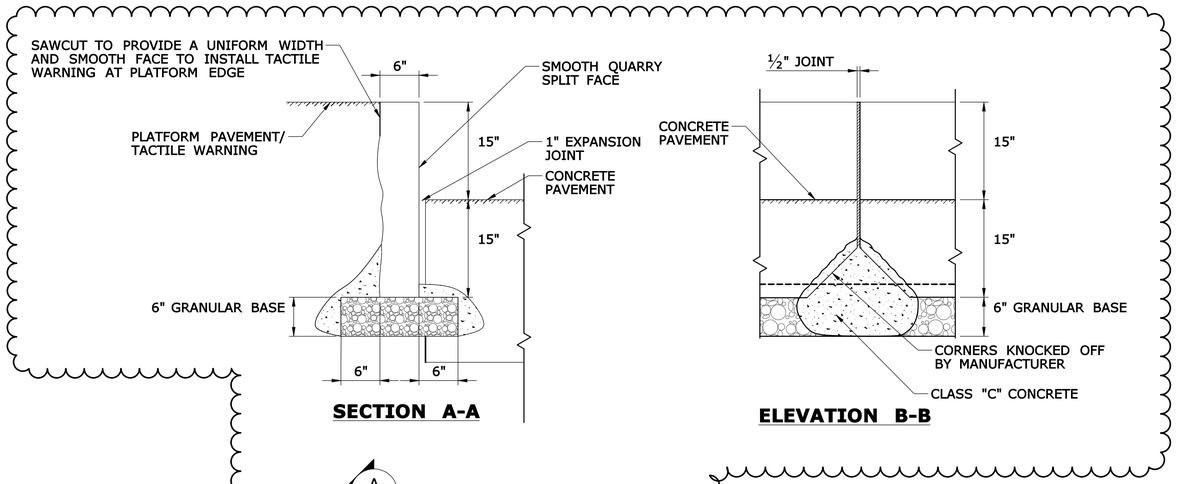

SECTION A-A

ELEVATION B-B

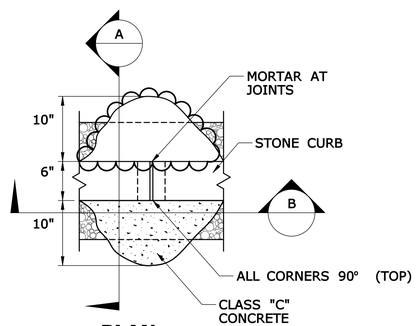

PLAN

NOTES:

1. ALL STONE CURBING SHALL BE GRANITE
2. MAXIMUM ALLOWABLE BREAK BACK IS
   9" FOR CURB LENGTHS OF 6' OR MORE,
   6" FOR CURB LENGTHS LESS THAN 6'

15" STONE CURB 1

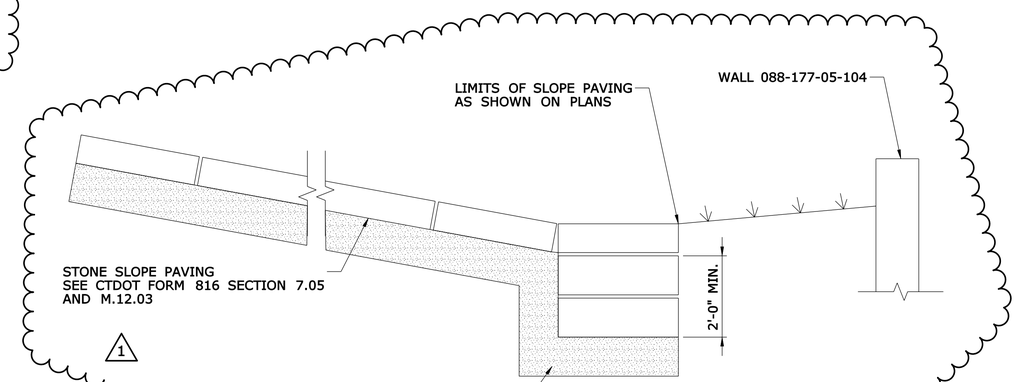

SLOPE PAVING
NOT TO SCALE

DESIGNED BY:
S E A
S E A CONSULTANTS INC.
Scientists/Engineers/Architects
200 CORPORATE PLACE
ROCKY HILL, CT 06067

Albert Bisacky
2011.08.09
14:44:44
-04'00'

ADDENDUM NO. 1

REV.	DATE	REVISION DESCRIPTION	SHEET NO.
-	-	-	-
-	-	-	-
-	-	-	-
-	-	-	-
-	-	-	-
1	07/27/11	A1 - REVISED STONE CURB/SLOPE PAVING	-

THE INFORMATION, INCLUDING ESTIMATED QUANTITIES OF WORK, SHOWN ON THESE SHEETS IS BASED ON LIMITED INVESTIGATIONS BY THE STATE AND IS IN NO WAY WARRANTED TO INDICATE THE CONDITIONS OF ACTUAL QUANTITIES OF WORK WHICH WILL BE REQUIRED.

Plotted Date: 8/2/2011

DESIGNER/DRAFTER: **EAD**
CHECKED BY: **AGB**
NTS

STATE OF CONNECTICUT
DEPARTMENT OF TRANSPORTATION

Filename: ...\FD_MSH_MDS_88H039_C02-CIV.A1.dgn

SIGNATURE BLOCK:
S E A Consultants Inc.
200 Corporate Place
Rocky Hill, CT 06067

PROJECT TITLE:
NEW BRITAIN - HARTFORD BUSWAY
DOWNTOWN NEW BRITAIN

TOWN: **NEW BRITAIN**

DRAWING TITLE: **CIVIL DETAILS**

PROJECT NO. **088-177**
DRAWING NO. **MDS-C02**
SHEET NO. **05.19.003.A1**

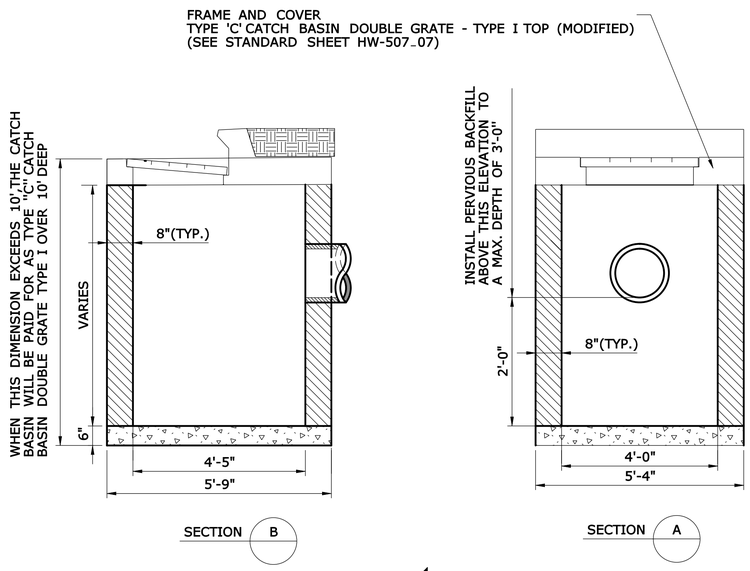

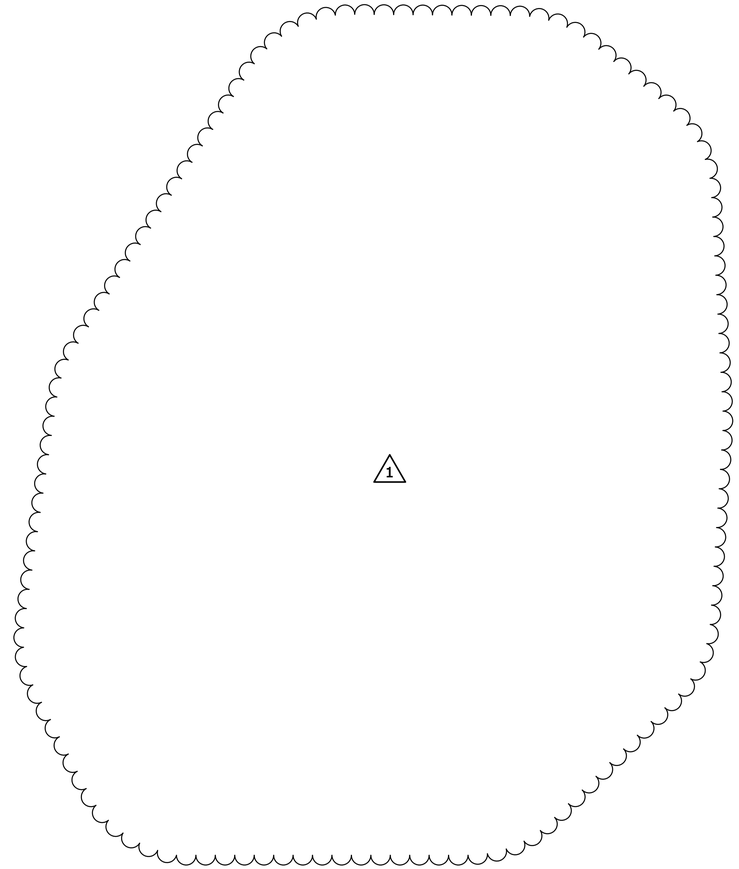

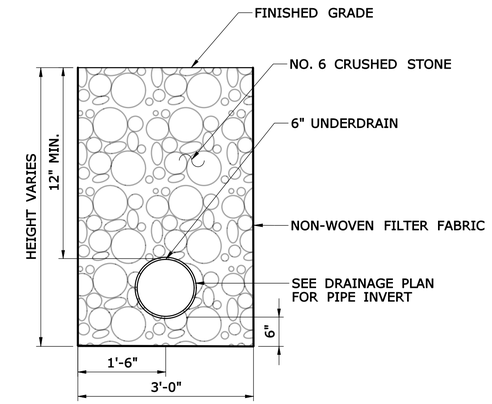

UNDERDRAIN IN CRUSHED STONE

NOT TO SCALE

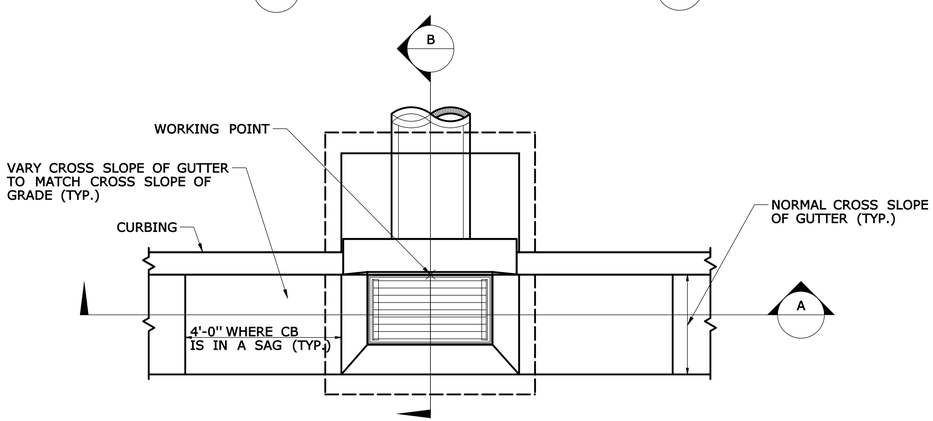

PLAN

TYPE 'C' CATCH BASIN DOUBLE TYPE I (MODIFIED)

NOT TO SCALE

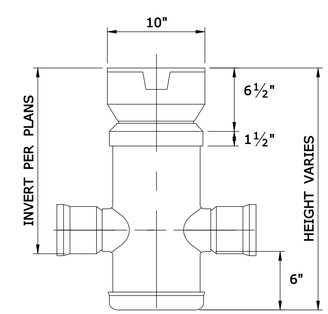

ELEVATION

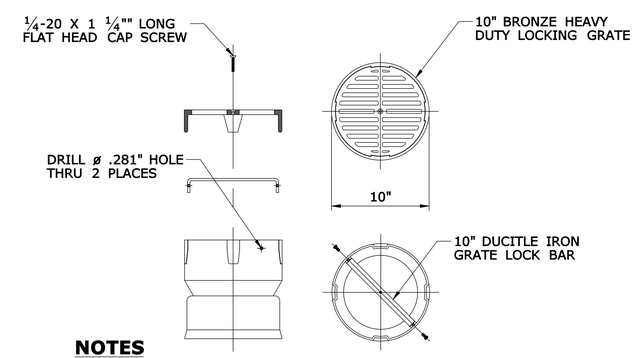

NOTES

1. SIZE OF OPENING MEETS REQUIREMENTS OF AMERICAN DISABILITY ACT.

10" BRONZE GRATE

YARD DRAIN

ADDENDUM NO. 1

REV.	DATE	REVISION DESCRIPTION	SHEET NO.
-	-	-	-
-	-	-	-
-	-	-	-
-	-	-	-
-	-	-	-
1	07/27/11	A1-DOGHOUSE MANHOLE DETAIL REMOVED	-

THE INFORMATION, INCLUDING ESTIMATED QUANTITIES OF WORK, SHOWN ON THESE SHEETS IS BASED ON LIMITED INVESTIGATIONS BY THE STATE AND IS IN NO WAY WARRANTED TO INDICATE THE CONDITIONS OF ACTUAL QUANTITIES OF WORK WHICH WILL BE REQUIRED.

Plotted Date: 7/26/2011

DESIGNER/DRAFTER: **EAD**

CHECKED BY: **AGB**

SCALE AS NOTED

STATE OF CONNECTICUT
DEPARTMENT OF TRANSPORTATION

Filename: ...\FD_MSH_MDS_88H039_C06-DRG.dgn

SIGNATURE BLOCK:

S E A Consultants Inc.
200 Corporate Place
Rocky Hill, CT 06067

PROJECT TITLE:
NEW BRITAIN - HARTFORD BUSWAY
DOWNTOWN NEW BRITAIN

TOWN: **NEW BRITAIN**

DRAWING TITLE: **DRAINAGE DETAILS**

PROJECT NO. **088-177**

DRAWING NO. **MDS-C06**

SHEET NO. **05.19.007.A1**